REVISIONS			
REV	DESCRIPTION	DATE	APPROVED

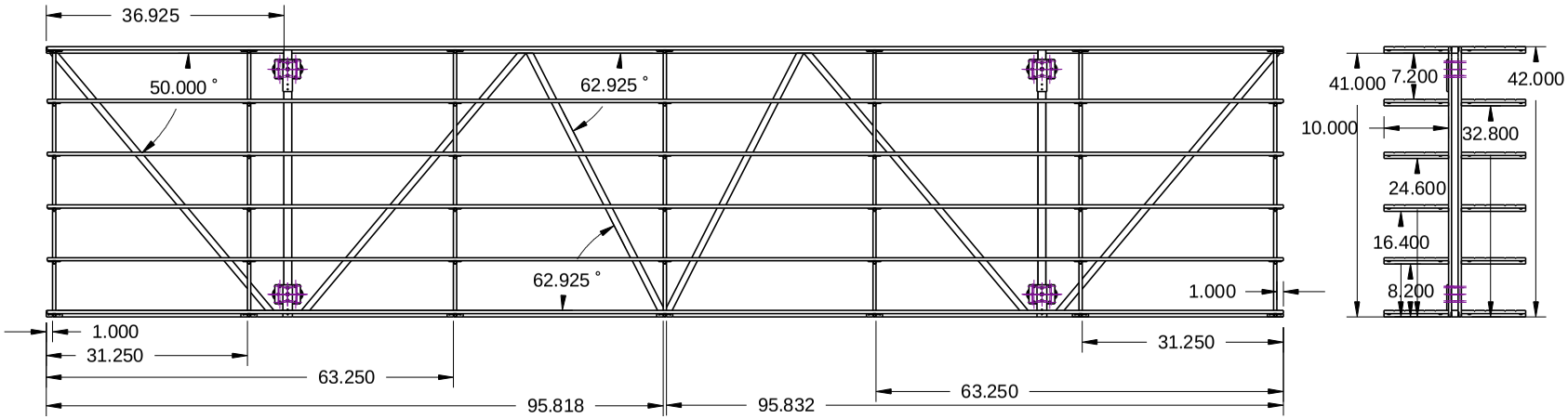

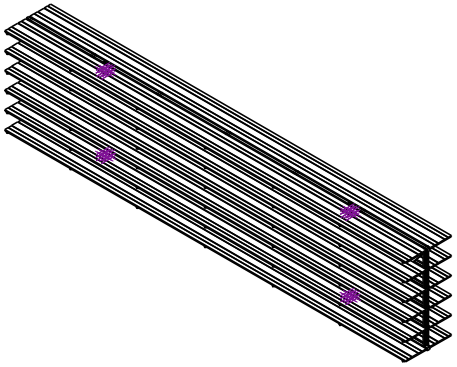

Drawn by:
Bruce Milligan

322 Blossom Ln
Albany, OR. 97321
www.SwitchCrafters.com

SwitchCrafters
ALBANY, OREGON
getting you on the right track...

SIZE	FSCM NO.	DWG NO.	REV
A			

Title: Elevator Frame Assembly

SHEET